Framework Napkins

by Heather Seth & Elise Lea for White Owl Textiles

Finished size: 19” x 19"

Bright Harvest - Page 2

Fabric Guide

	Napkins ⅝ yard		**Napkins** ⅝ yard	Each ⅝ yard makes 2 napkins.

Kindly note, our free patterns are not to be sold nor hosted on any other websites. We appreciate your understanding.

All seam allowances are ¼" unless otherwise stated.
Press seams open unless otherwise stated.

WOF = Width of Fabric (selvage to selvage)
RST = Right Sides Together

Cutting Instructions

From each fabric	*Cut two 20" squares*

Sewing Instructions

Step 1: Fold and press all edges ¼" wrong sides together. Fold over another ¼" and press again.

Step 2: Open the corners back up and trim along the line shown below, using your pressed lines as a guide.

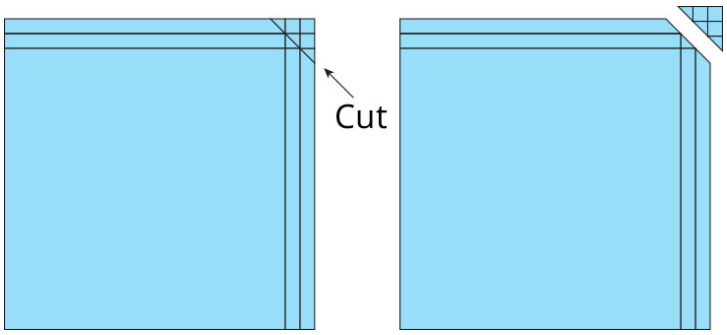

Step 3: Fold over and press the trimmed corner ¼" wrong sides together.

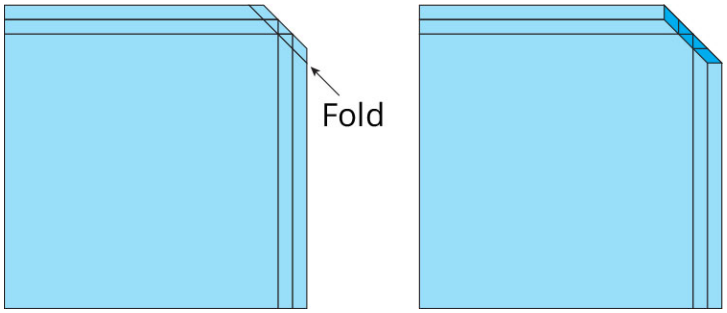

Step 4: Repeat Steps 2-3 for all 4 corners.

Step 5: Refold napkin along original ¼" fold line and press. Refold along the second 1/4" fold line and press.

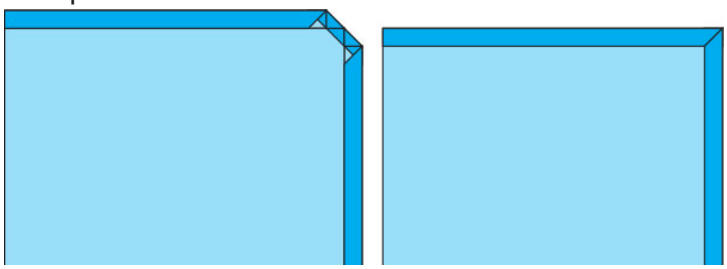

Step 6: Topstitch around the entire napkin, close to the edge of the hem.

Repeat to make desired number of napkins.

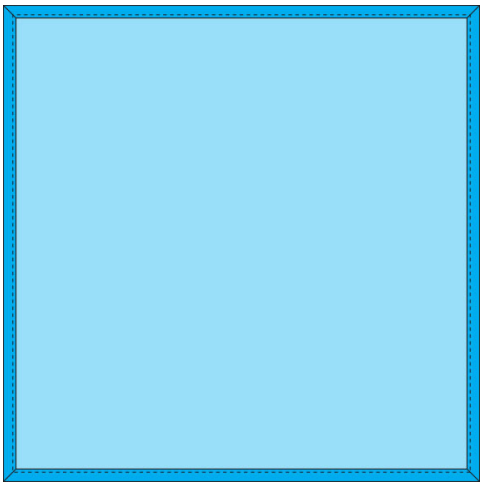

Woohoo! Your Napkins are now finished!

Copyright ©2025 Lumin Fabrics, All Rights Reserved

Bright Harvest

Fabric Guide

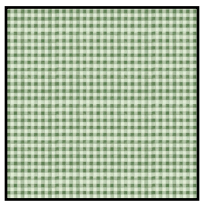

Napkins
W195-024-888
⅝ yard

Napkins
W195-018-328
⅝ yard

Each ⅝ yard makes 2 napkins.

Copyright ©2025 Lumin Fabrics, All Rights Reserved